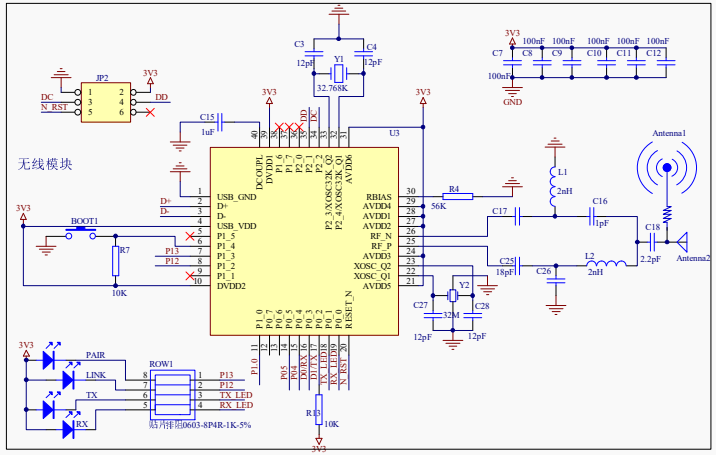

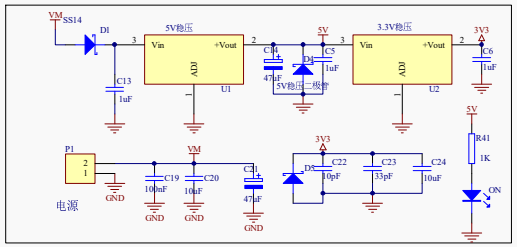

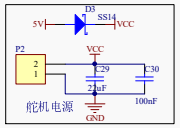

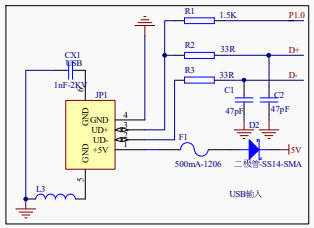

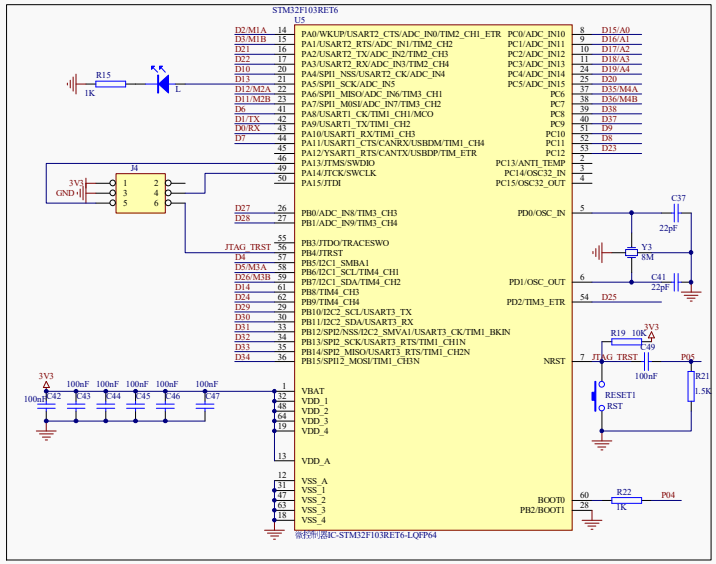

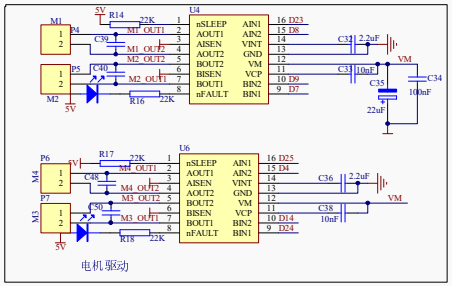

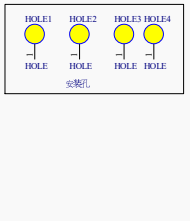

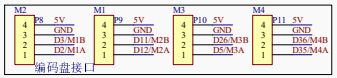

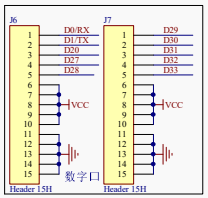

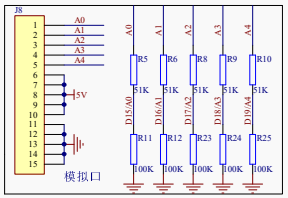

DFROBOT	Title: *Romeo BLE Quad*		SKU: DFR0398
	Drawn: LF-CD	Revision: V1.0	Size: A2
	Page: 1 of 1	Date: 2016/4/13	Time: 9:49:19