TP4057 USB Li Battery Charger

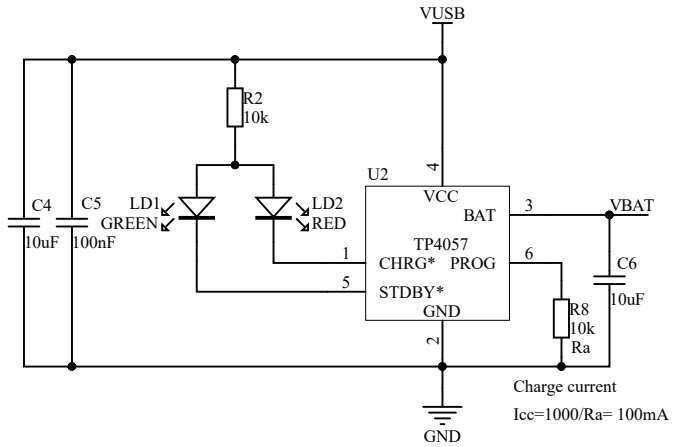

SPV1050 Micro Solar Power Manager

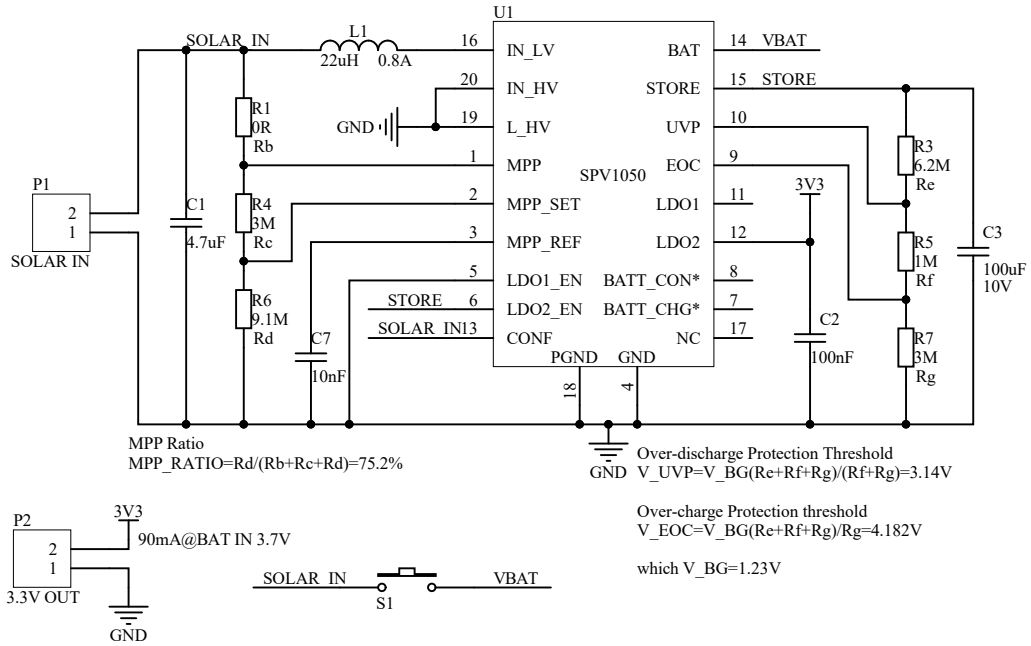

USB Port

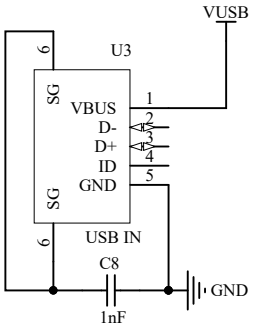

micro USB type-A female charge IN

Battery Port

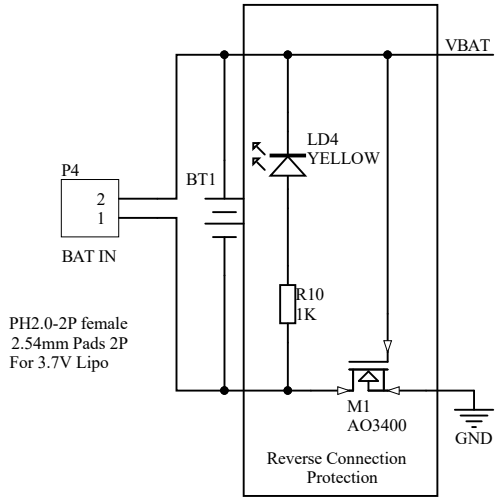

PH2.0-2P female
2.54mm Pads 2P
For 3.7V Lipo

Sunflower: Solar Power Manager Micro

DFROBOT	Title:		SKU: DFR0579
	Drawn: Henry-SH	Revision: V1.0	Size: A4
	Page: 1 of 1	Date: 2018/5/16	Time: 14:49:43