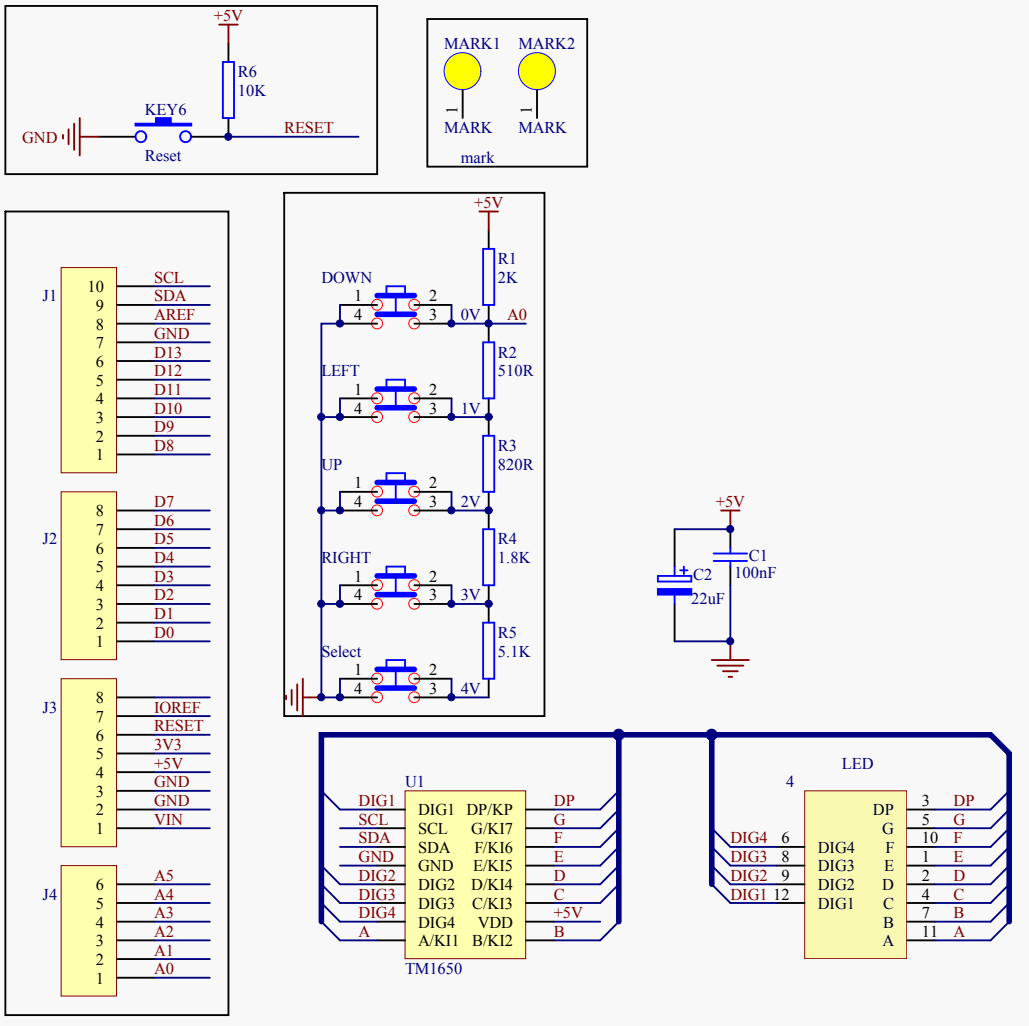

Title: *LED Keypad shield*			SKU: DFRxxxx
Drawn: XXXXX-CD	Revision: V1.0		Size: A4
Page: 1 of 1	Date: 2016/1/13		Time: 10:55:05