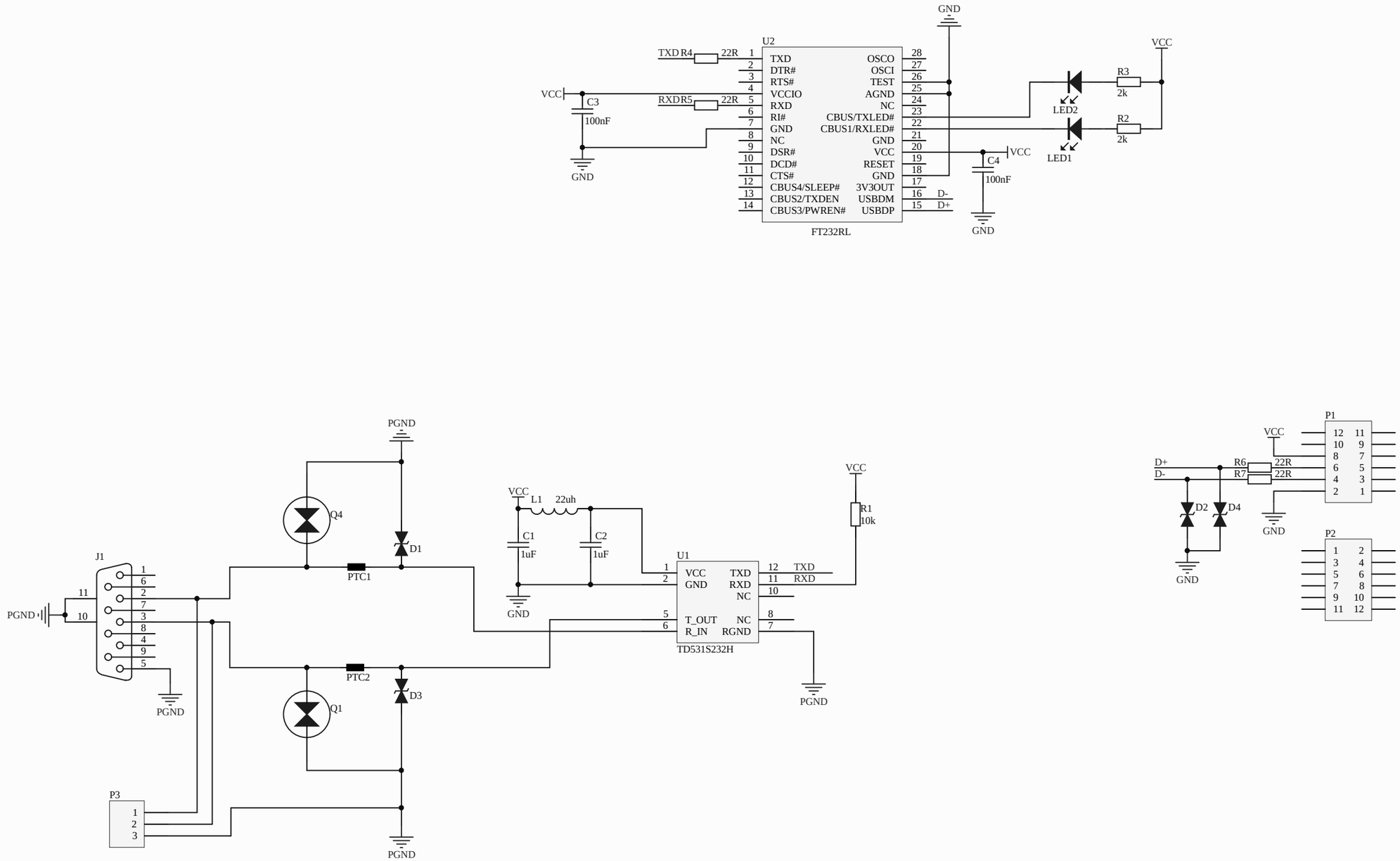


| | | | |
|---|---|---|---|
| Title: *LattePanda V2 RS232* | | Code: *DFR0778* | |
| Drawn: *Aaron-CD* | Revision: *V1.0* | Size: *A3* | |
| Page: *1 of 1* | Date: *2021/3/1* | Time: *11:40:08* | |